E-07

CLUTCH

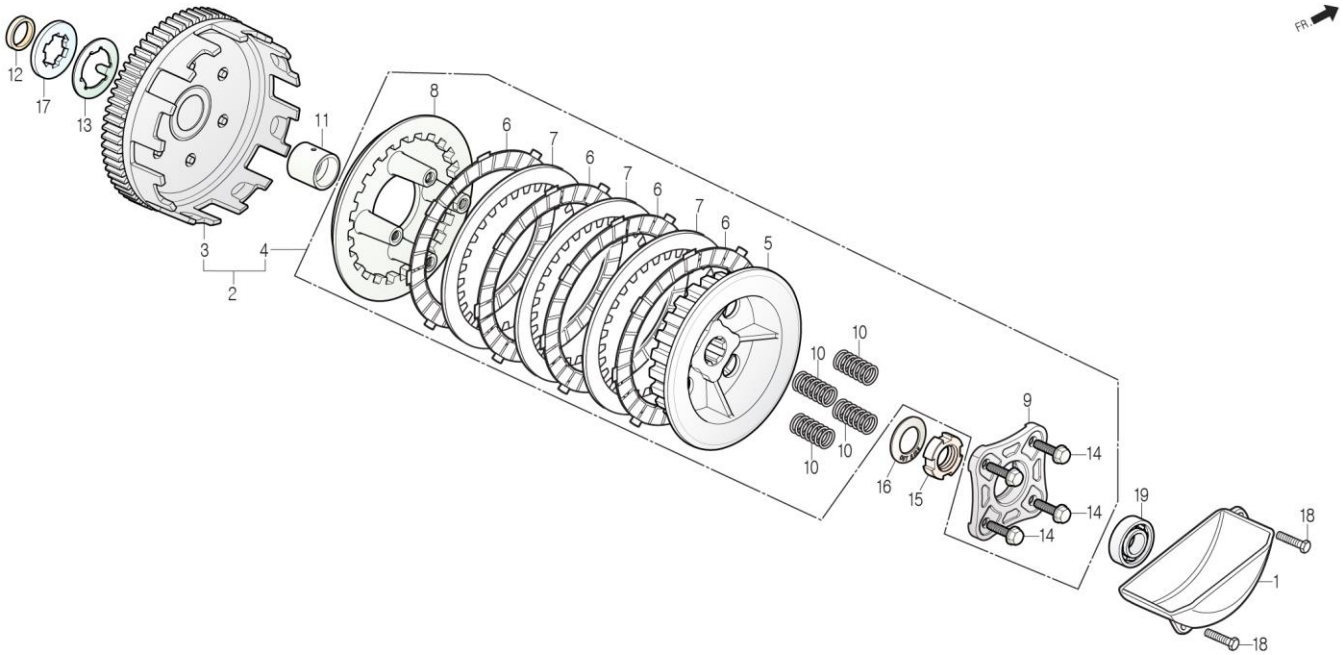

Service item	FRT	Ref No.	Part No.	Description	QTY	A/S	Exch	Start Date	End Date	Start FRM.No	End FRM.No
PLATE, OIL SEPRATOR	1.1	1	15661-CB2-9100	PLATE, OIL SEPARATER	1	Y		20030320		KMYCB4BLS3C000001	
		2	22100-CB4-0000	CLUTCH ASS'Y	1	Y		20030320		KMYCB4BLS3C000001	
OUTER COMP., CLUTCH	1.2	3	22110-CB2-9110	OUTER COMP., CLUTCH	1	Y		20030320		KMYCB4BLS3C000001	
.CENTER COMP., CLUTCH		4	2212A-CB4-0000	CENTER ASS'Y, CLUTCH	1	Y		20030320		KMYCB4BLS3C000001	
.DISK A, CLUTCH FRICTION	1.0	5	22120-CB2-9100	CENTER COMP., CLUTCH	1	N		20030320		KMYCB4BLS3C000001	
(ONE OR ALL)											
(INCLUDE RELATIVE PARTS)		6	22201-CB2-9200	DISK, CLUTCH FRICTION	4	Y		20030320		KMYCB4BLS3C000001	
.PLATE, CLUTCH PRESSURE		7	22311-BA6-0000	PLATE, CLUTCH	3	Y		20030320		KMYCB4BLS3C000001	
		8	22350-CB2-0200	PLATE, CLUTCH PRESSURE	1	N		20030320		KMYCB4BLS3C000001	
SPRING, CLUTCH	0.7	9	22361-CB2-9200	PLATE, CLUTCH LIFTER	1	N		20030320		KMYCB4BLS3C000001	
(ONE OR ALL)		10	22401-CB4-0000	SPRING, CLUTCH	4	N		20030320		KMYCB4BLS3C000001	
		11	23112-CB2-9100	COLLAR, CLUTCH CENTER	1	Y		20030320		KMYCB4BLS3C000001	
		12	23216-CB2-9100	COLLAR, DISTANCE	1	Y		20030320		KMYCB4BLS3C000001	
		13	23217-CB2-9100	SET RING, 17mm	1	Y		20030320		KMYCB4BLS3C000001	
		14	90050-BA6-0000	BOLT, SPECIAL FLANGE, 6x22	4	N		20030320		KMYCB4BLS3C000001	
		15	90231-CB2-1000	NUT B, LOCK, 14mm	1	Y		20030320		KMYCB4BLS3C000001	
		16	90432-CB2-0000	WASHER B, LOCK	1	Y		20030320		KMYCB4BLS3C000001	
		17	90462-CB2-9100	WASHER B, SPLINE, 17mm	1	Y		20030320		KMYCB4BLS3C000001	
		18	S2020-06020-0A	BOLT, HEX, 6x20	2	Y		20030320		KMYCB4BLS3C000001	
		19	S6100-60000-00	BEARING, RADIAL BALL 6000	1	Y		20030320		KMYCB4BLS3C000001	